Temconex® -Technology

CONTINUOUS PRODUCTS OF METAL POWDER

Temconex® (**Tem**perature controlled **con**tinuous **ex**trusion) is a registered trademark of the Neue Materialien Fürth GmbH (NMF) representing an innovative process for continuous extrusion of metallic powders. It provides a new generation of the so-called Conform™ process. The conventional Conform™ technology is typically designed for the processing of continuous cast wire rod as feeding material (aluminum or copper). The Temconex® unit at NMF is specially developed for the processing of powders, chips and granules. The modified tool design allows a precise temperature control of the forming zone and thus expands the range of processable materials tremendously.

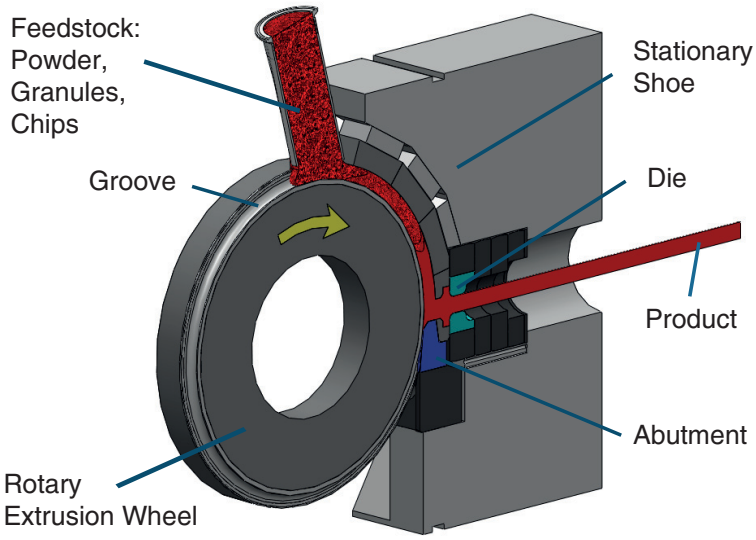

Figure 1: The Temconex®-process for the processing of bulk materials as feedstock

THE TEMCONEX®-PROCESS

The main components of the Temconex® machine are a rotating wheel with a circumferential groove and a stationary shoe, which incorporates the tooling, partly overlaps the wheel surface and forms an extrusion chamber. The feedstock is contracted into the extrusion chamber by frictional grip. An abutment, which fits in the wheel groove, redirects the material flow into the die chamber. The powder particles are cold-welded together by shear forces and thus compacted to a fully dense solid. The frictional forces arising from continued wheel rotation generate the temperature and pressure required for continuous extrusion through the die (figure 1). Figure 2 shows the Temconex® unit during production.

Figure 2: Continuous powder extrusion of semi-finished products by NMF Temconex® technology

GRANULATION VIA ROLLER COMPACTOR

At NMF, there is also a possibility to prepare the bulk material before processing in the Temconex® process by means of a roller compactor. This granulation process enables a binder-free and dry agglomeration of metallic powders or powder mixtures.

Neue Materialien Fürth

ADVANTAGES OF THE TEMCONEX®-TECHNOLOGY

- Processing of a wide range of materials e.g. aluminum, copper, silver and their alloys
- Processing of composites
- Wide range of processable feedstock shape from powder to granules (figure 3)
- Recycling of chip material
- Wide range of final profiles like wires, rods and tubes or more complex geometries (figure 4)
- Very good surface quality
- Products with 100% density and excellent mechanical properties
- Economic material and energy consumption
- Short and continuous processing route with a high level of automation
- Compaction of metal powders into final shapes by only one process step

FIELDS OF APPLICATION

A selection of applications that have already been realized with Temconex® technology in recent years:

- Consolidation of foamable aluminum semifinished products for the production of aluminum foam parts (wrought and cast alloys)
- Compaction of oxide-dispersion-strengthened (ODS) copper for use in welding and electrical engineering
- Continuous powder extrusion of contact materials for application in low and medium voltage technology
- Compaction of innovative conductor materials for use in electrical distribution systems
- Production of semifinished products from rapidly solidified aluminum alloys for further use in joining technology

Figure 3: Processing of a wide range of materials and geometries of bulk material by the Temconex® process

WE OFFER

Our know-how covers practical and theoretical experience concerning the Temconex®-technology. Linking research with production, the NMF GmbH offers the following services as R&D partner:

- Feasibility studies
- Development projects from prototype to pilot production
- Process and technology developments
- Numerical simulation of material flow (figure 5)
- Material characterization: powder analysis, metallography, microscopy, mechanical tests, elemental analysis (N, O, C and S) etc.

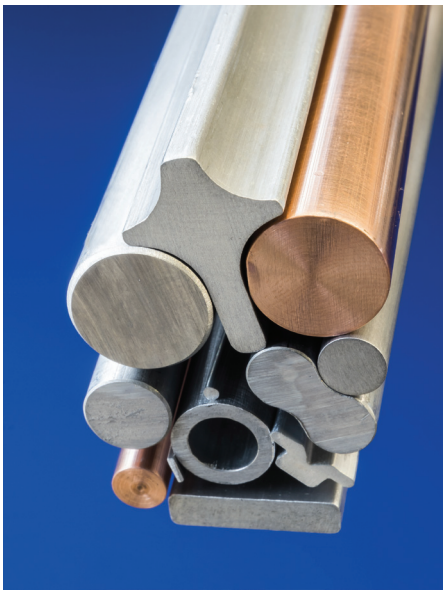

Figure 4: Continuous semi-finished products manufactured with the Temconex® unit

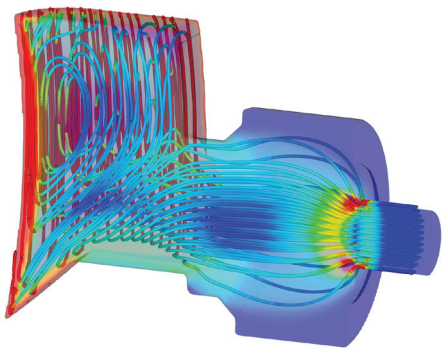

Figure 5: Modeling of the material flow (e.g. strain rate) during extrusion in the Temconex® unit

Contact

www.nmfgmbh.de

Neue Materialien Fürth GmbH
Dr.-Mack-Straße 81
90762 Fürth

E-Mail: temconex@nmfgmbh.de